TRANSFER OF SAILPLANE TECHNOLOGY INTO THE LIGHT AEROPLANE OF THE FUTURE

by Piero Morelli, Politecnico di Torino

Presented at the XX OSTIV Congress,
Benalla, Australia (1987)

1. INTRODUCTION

The transfer of the sailplane technology into the aeroplane in general and the light aeroplane in particular, is not a prophecy: it has started already.

In about half a century, from the 30's to the 80's, the light aeroplane has changed very little. There is no substantial difference between the "Luscome 8 - Silvaire" and the Cessna 152, 172, 182, still in production (**Figure 1**); or between the "Ercoupe 415" and the Piper PA-38 "Tomahawk" or the Taylorcraft "New Cub" and the Piper "Super Cub"; or, surprisingly, between the Avia LM-5 and the Robin ATL (**Figure 2**): neither in the general architecture nor in the performance, if related to the specific power installed.

In the same period the sailplane has undergone a striking development. Try to compare the Reiher or the Weihe of the late 30's with the actual Nimbus 3 or ASW-22B (**Figure 3**). Not only has the best glide ratio more than doubled and the minimum sinking speed improved even at a wing loading almost three times as high, but the cross-country performance has increased to incomparable levels.

2. THE HIGHLIGHTS OF SAILPLANE DEVELOPMENT

How was this improvement in performance possible? Two basic innovations are the main reasons for it:

--new airfoils, capable of extended laminar flow in the boundary layer;

--new materials and construction methods, making use of composite materials (a matrix of epoxy reinforced by glass or graphite or aramid fibers).

Although the airfoils concern the aerodynamic design and the composite materials concern the structure, an interaction is clearly there. The composites allow the realization of such perfect external surfaces (mirror-like smoothness, lack of waviness) that full advantage is drawn from the new airfoils. This is also beneficial to fuselage and tail and to the intersection of the various parts, the realization of complex double curvature surfaces for fairings becoming easy.

A comparison between the conventional construction methods (wood or metal) and the new one shows the difference (**Figure 4**). The traditional construction methods proceed from inside outwards: first spar(s) and ribs are laid down on the jig and then metal or plywood skin is applied. The opposite occurs with the composites: one starts from the exterior surface, in contact with the female mould (very accurately shaped), and proceeds inwards.

It is difficult to obtain the maximum possible extension of laminar flow typical of modern airfoils, with a wooden or metal construction, unless a special design is adopted and many manhours are spent on an artisan's type of work aimed at correcting the unavoidable imperfections of the outer surface.

It may happen that good aerodynamic characteristics are achieved, but within a limited range of lift coefficient (C_L).

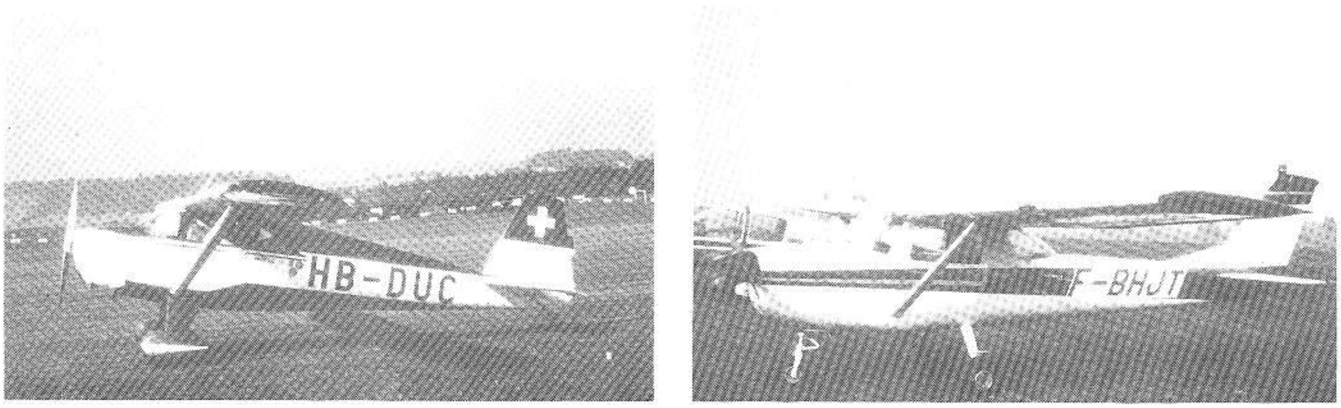

LUSCOMBE Mod.8 "Silvaire"		CESSNA 152
1937	Start of production (year)	1977
10.70	Wing span (m)	10.11
6.10	Length (m)	7.34
13	Wing area (m^2)	14.82
8.6	Wing aspect ratio	6.7
322	Empty weight (kg)	515
594	Total weight (kg)	757
Continental A-75, 75 hp	Engine	Lycoming O-235, 108 hp
185	Max. horiz. speed (km/h)	202
176	Cruising speed (km/h)	185
68	Min. horiz. speed (km/h)	80
4,575	Ceiling (m)	4,480
800	Range (km)	583

Figure 1. Luscombe Mod. 8 "Silvaire" and Cessna 152.

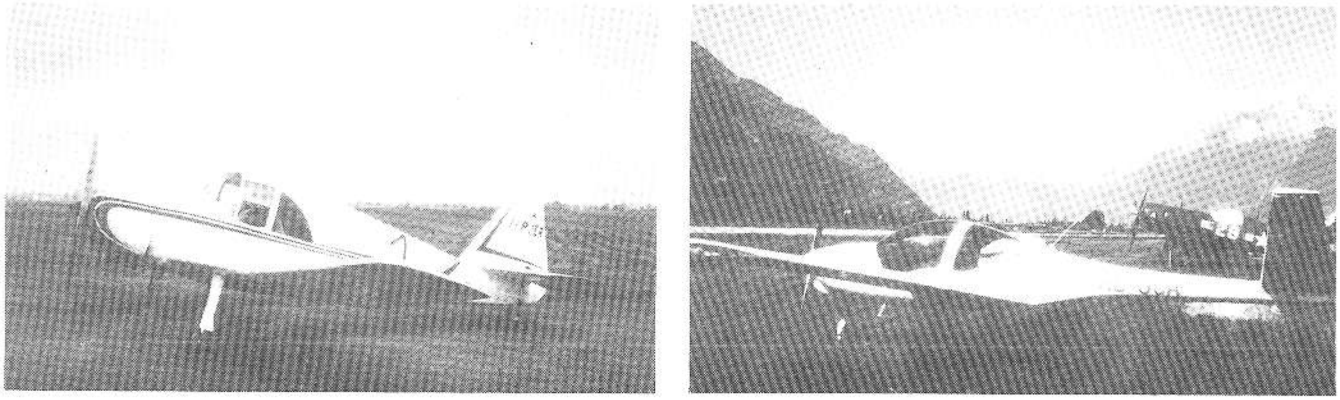

AVIA LM-5 "Aviastar"		ROBIN ATL
1945	Start of production (year)	1983
11,70	Wing span (m)	10.25
6.16	Length (m)	6.72
14.45	Wing area (m^2)	12.15
8.65	Wing aspect ratio	8.65
330	Empty weight (kg)	360
560	Total weight (kg)	580
CNA D IV, 60 hp	Engine	JPX 4T 60, 65 hp
185	Max. horiz. speed (km/h)	185
150	Cruising speed (km/h)	150
60	Min. horiz. speed (km/h)	75
5,000	Ceiling (m)	3,350
825	Range (km)	686

Figure 2. AVIA LM-5 "Aviastar" and Robin ATL

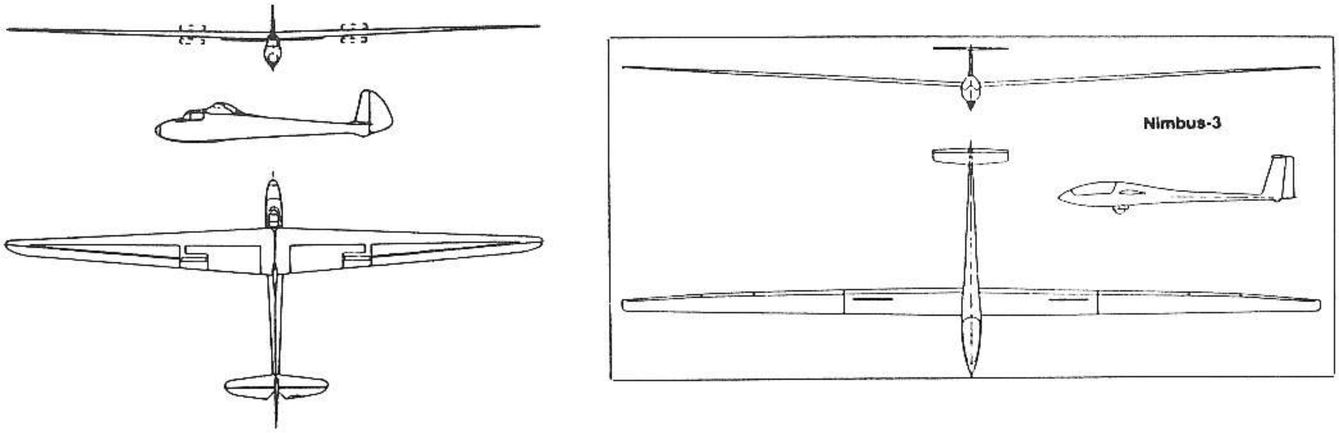

WEIHE		NIMBUS 3
1938	Start of production (year)	1981
18.0	Wing span (m)	22.9
8.3	Length (m)	7.7
18.2	Wing area (m^2)	16.2
17.8	Wing aspect ratio	32.3
195	Empty weight (kg)	360
335	Max. total weight (kg)	750
18.4	Max. wing loading (kg/m^2)	46
29 (at 76 km/h)	Best glide ratio	55 (at 125 km/h)
0.58	Min. sinking speed (m/s)	0.52
4.3 (at 18.4 kg/m^2)	Sinking speed at 150 km/h (m/s)	0.8 (at 46 kg/m^2)

Figure 3. Weihe and Nimbus 3

In this case, one of the big advantages of these airfoils over those of the previous generation (NACA 6-, for instance) is lost, i.e.: the low drag characteristics within a wide range of C_L and more of this if the airfoil is provided with a flap (**Figure 5**).

The composite materials, if graphite is adopted as reinforcement, are not only very strong but also very stiff. They have permitted a considerable increase of the wing aspect ratio (A). If the aerodynamic polar is approximated with the simple quadratic equation:

$$C_D = C_{Do} + C_L^2/\pi.A.e$$

(where C_{Do} is the drag coefficient taking into account profile and parasitic drag; "e" accounts for various types of drag increase with C_L), the following expression is easily derived for the best L/D or glide ratio:

$$(L/D)_{max} = \sqrt{\pi.A.e/4.C_{Do}}$$

which shows that increase of A (composites), decrease of C_{Do} (laminar airfoils), "e" close to one (low interference drag, small variation of profile drag with C_L) have made it possible to achieve a best glide ratio approaching and even attaining 60 (**Figure 6**).

This is more or less the actual situation: the highest performance gliders feature large span, high aspect ratio, a flapped wing and a structure made of composite materials. Of course, they are very expensive: performance has a price.

Progress is still possible in two main directions: (i) variable geometry; (ii) boundary layer control. Both possibilities are being exploited already.

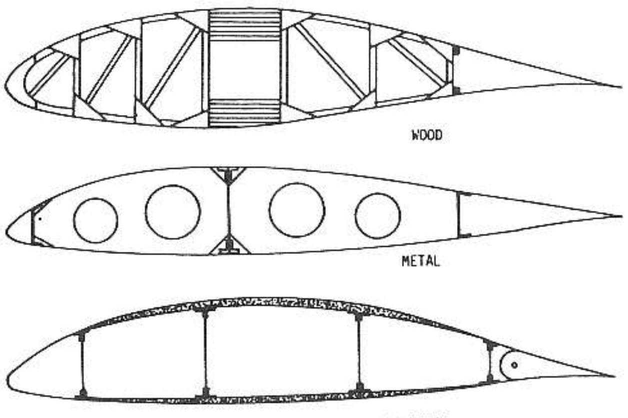

Figure 4.

3. THE MOTORGLIDER

The motorglider or "powered sailplane" is an old idea, but only in the early 60's did production of small series start. The basic idea behind the motorglider is to have a glider capable of launching itself. Two additional advantages come with it however: the outlanding can be avoided and the flying time can be as long as wanted even in still air, as needed for training purposes. Whereas the glider needs a towplane with its pilot, a retrieving car and trailer with its driver, the motorglider can do without all this.

If we look at the actual production of motorgliders we

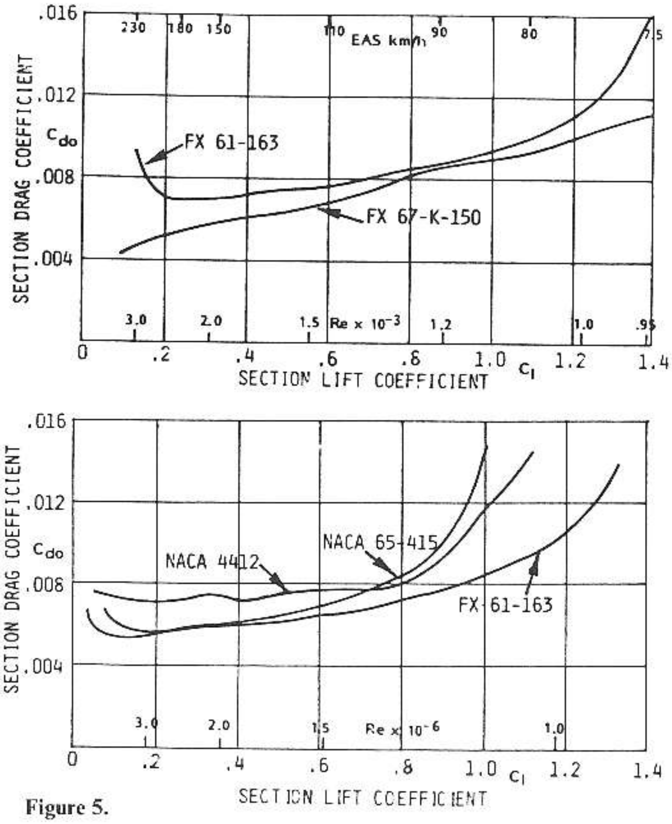

Figure 5.

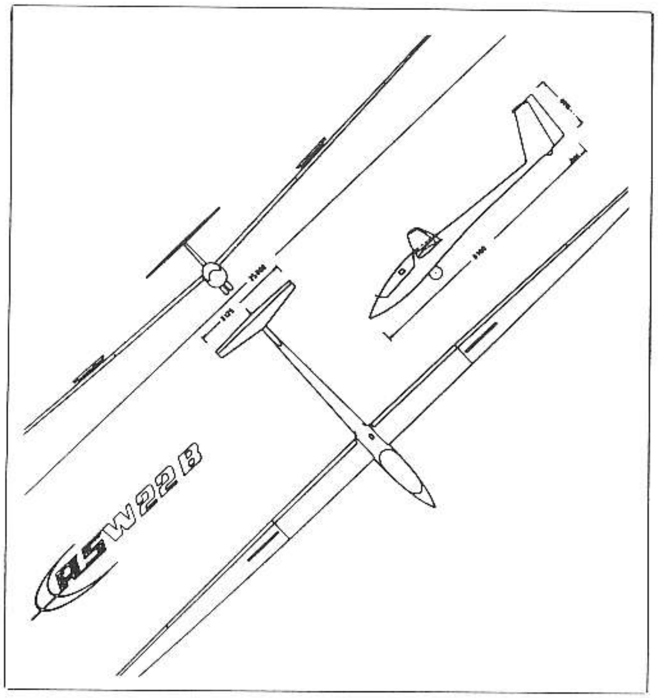

Figure 6. AS-W 22B. Highest performance sailplane in production.
Wing span 25m.
Wing aspect ratio 38.3
Max total weight 750 kg
Best glide ratio 60:1
Min. sinking speed 0.44 m/s
Stalling speed 75 km/h
Max. speed 280 km/h

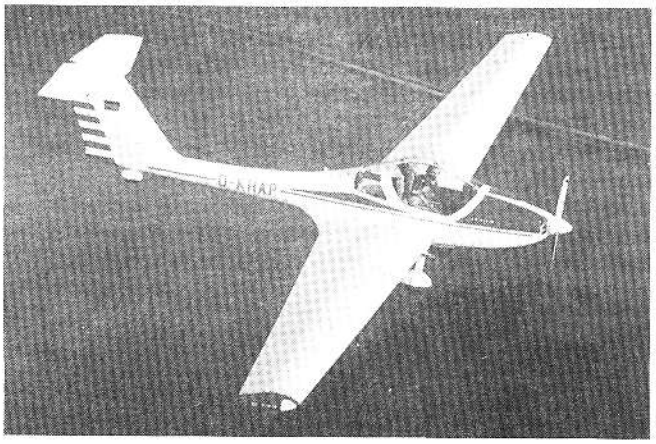

Figure 7. GROB G-109

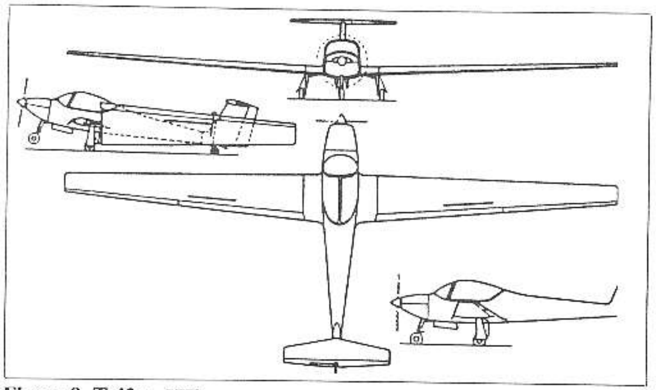

Figure 8. Taifun 17E

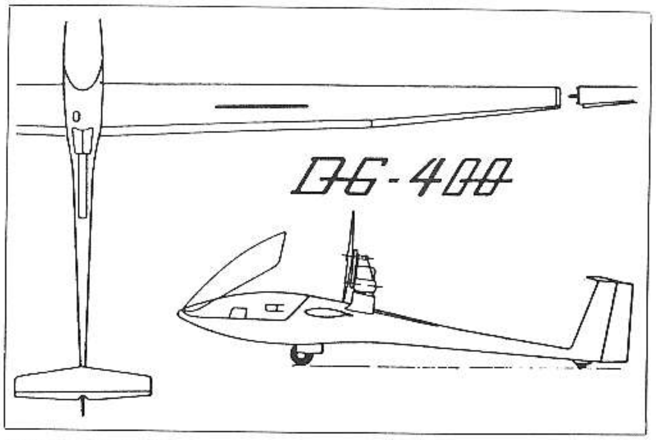

Figure 9. DG-400

clearly see two lines of development:

(1) a motorplane with soaring capability;

(2) a sailplane with motor flying capability, or, to be shorter, the "motorplane with sails" and the "sailplane with motor."

The first type is a good aeroplane with rather limited soaring capability (e.g.: SF-25, SF-28, G-109, Dimona, Taifun, HB 21 and 23, etc.) (**Figure 7 and 8**).

The second type is a high performance sailplane with limited motor-flying performance (e.g.: PIK 20E, DG-400, Janus CM, Nimbus 3M, ASW-22 BE, ASH-25, etc.) (**Figure 9**).

TYPE		SF-25C FALKE 85 (SF 25 E)	SF-36	G-109 B	HB-23/2400 "Hobby liner"	H-36 DIMONA	TAIFUN 17 E
Manufacturer		Scheibe Germany	Scheibe Germany	Grob Germany	Brditschka Austria	Hoffmann Aircraft Austria	Valentin Germany
Construction		wood/metal	GFRP	GFRP/CFRP	wood/metal/GFRP	GFRP	GFRP
Seat arrangement		side by side	side by side	side by side	side by side	side by side	side by side
Wing span	m	15.30 (18)	18	17.4	16.24	16.0	17.0
Wing area	m^2	18.20	16.4	19.0	19.0	15.2	17.6
Wing aspect ratio		12.90 (17.80)	19.7	15.9	13.9	16.8	16.4
Empty weight	kg	400 (440)	500	620	550	520	600
Max. weight	kg	650	715	850	750	770	820
Max. wing loading	kg/m^2	33.5 (35)	45.8	44.7	39.5	50.7	46.6
Engine		Limbach 65 hp	Limbach 80 hp	Grob 90 hp	Brditschka 100 hp	Limbach 80 hp	Limbach 90 hp
Fuel	l	55 (option 80)	55	100	66	80	90
Glider performance							
Best glide ratio		24 (29)	28	28	25	27	30
at	km/h	85	95	115	98	105	105
Min. sinking speed	m/s	1.0 (0.85)	1.0	1.1	1.2	0.9	0.95
Stalling speed	km/h	65 (68)	78	73	75	72	72
V_{NE}	km/h	190	210	240	200	275	245
Aeroplane performance							
Max. level speed	km/h	180	-	205	187	180	205
Cruising speed	km/h	160 (150)	180	180	160	170	-
Rate of climb	m/s	2.3 (2.5)	3	3.3	4.5	3.5	3.2
Take-off run	m	180	200	196	200	180	270
Landing run	m	100	150	200	210	150	200
Range	km	700	900	1500	850	1000	1250

Table I. Two-seater motorgliders with fixed engine and propeller.

Table II. Motorgliders with retractable engine and propeller.

TYPE		DG-400	PIK-20 E 2F	NIMBUS 3T Self Sustaining M.G.	ASW-22 BE	JANUS CM	ASH-25 MB
Manufacturer		Glaser-Dirks Germany	Issore-Aviation France	Schempp-Hirth Germany	Schleicher Germany	Schempp-Hirth Germany	Schleicher Germany
Construction		GFRP/CFRP	GFRP	GFRP/CFRP	GFRP/CFRP/Aramid	GFRP/CFRP	GFRP/CFRP/Aramid
Seat arrangement		single	single	single	single	2 tandem	2 tandem
Wing span	m	15 (17)	15 (17)	24.5	25	20	25
Wing area	m^2	10 (10.57)	10 (10.63)	16.7	16.3	17.4	16.3
Wing aspect ratio		22.5 (27.3)	22.5 (27.2)	35.9	38.3	23	38.3
Empty weight	kg	296 (300)	310 (315)	430	510	465	501
Max. weight	kg	480 (460)	470 (460)	750	750	680	750
Max. wing loading	kg/m^2	48 (43.5)	47 (43)	45	46	39	46
Engine		Rotax 505, 43 hp	Rotax 505, 43 hp	Solo 22 hp	Rotax 505, 43 hp	Rotax, 60 hp	Rotax 505, 43 hp
Fuel	l	15 (option:40)	30	15	70	10	74
Glider performance							
Best glide ratio		42 (45)	41 (45)	58	60	43.5	57
at	km/h	110	117 (110)	95	-	110	108
Min. sinking speed	m/s	0.60 (0.45)	0.7 (0.54)	0.41	0.44	0.60	0.45
Stalling speed	km/h	65 (63)	66	60	75	70	84
V_{NE}	km/h	270	285 (280)	270	280	220	380
Aeroplane performance							
Max. level speed	km/h	-	-	-	-	-	-
Cruising speed	km/h	-	-	-	-	-	-
Rate of climb	m/s	3.9	4	-	2.20	-	-
Take-off run	m	140 (100)	280	-	-	-	-
Landing run	m	-	-	-	-	-	-
Range	km	-	-	-	-	-	-

Tables I and II show the main characteristics of the better known existing motorgliders of both types.

The two trends mentioned above reflect the compromise between engine-on and engine-off performance: in one case priority is given to good aeroplane characteristics, in the other case to good sailplane performance.

In fact, to combine good performance with engine-on and engine-off is a most challenging engineering problem.

A very recent realization, however, the Stemme S.10, represents for the first time the combination of a good aeroplane with a good sailplane, as **Figures 10 to 13** clearly show. The S.10 might be the forerunner of a new line of development.

Both types of motorgliders, of course, comply with the OSTIV/FAI specifications (**Table III**). Both enter the motorglider competitions, of which the "European Motorglider Championships" is the highest in rank so far.

FAI-OSTIV SPECIFICATIONS

FOR MOTORGLIDERS OR POWERED SAILPLANES

(a) MAX WEIGHT:	NOT GREATER THAN 850 kg;
(b) TAKE-OFF DISTANCE TO 15 m HEIGHT AT SPEED NOT LESS THAN 1.3 V_{S1} IN ZERO WIND AND FROM DRY LEVEL GRASS:	NOT GREATER THAN 600 m;
(c) TIME TO CLIMB FROM LIFT-OFF TO 300 m WITH: 1. ENGINE(S) DELIVERING NOT MORE THAN T.O. POWER; 2. LANDING GEAR RETRACTED; 3. WING FLAPS IN THE T.O. POSITION; 4. COOLING AIR GILLS (IF ANY) IN THE POSITION USED DURING COOLING TESTS:	NOT GREATER THAN 4 min;
(d) STALLING SPEED WITH AIRBRAKES IN:	NOT GREATER THAN 80 km/h;
(e) OPTIMUM GLIDE RATIO WITH ENGINES OFF:	NOT STEEPER THAN 1:20;
(f) NUMBER OF SEATS:	NOT MORE THAN 2.

Table III. FAI-OSTIV specifications for motorgliders or powered sailplanes.

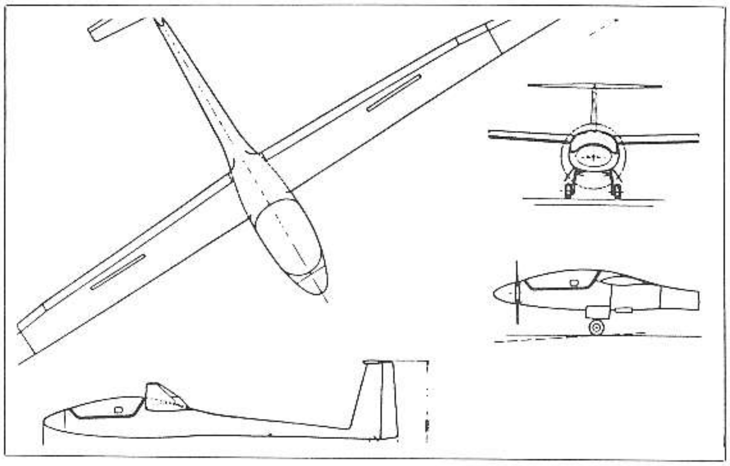

Figure 10. Stemme S10

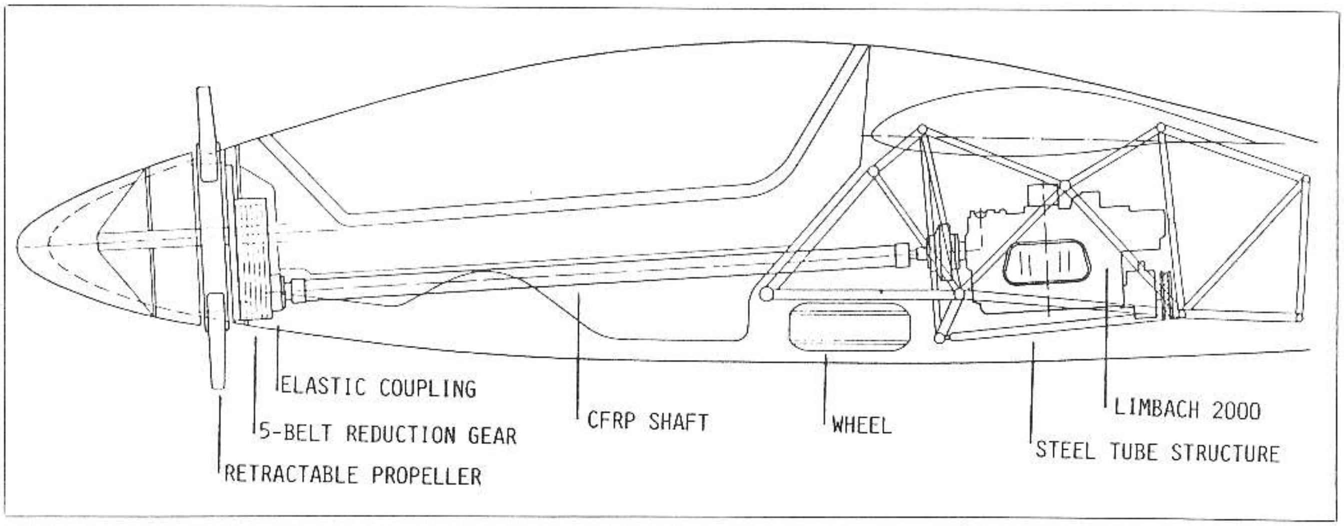

Figure 11. Stemme S10 power system

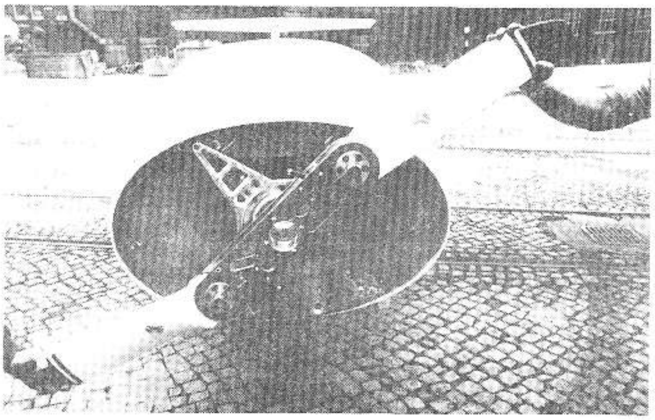

Figure 12. Stemme S10 propeller extended

Figure 13. Stemme S10 propeller retracted

Here the motorglider is strictly considered as a "self-launching sailplane." Competing motorgliders are divided into several classes. In the speed tasks over a prefixed course, the competitor who has used the engine even for a very short time after crossing the start-line, is given zero speed points and a reduced number of distance points.

This type of competition is really a Gliding Championship where the towplanes are replaced by the self-launching capability of the gliders. It is therefore perfectly correct that these Championships come under the jurisdiction of FAI-CIVV. They seem to be successful and certainly stimulate the development of "self-launching sailplanes."

It is well known, however, that motorgliders of the first type are currently used for motor flying and for travelling, just as light aeroplanes. This use has nothing to do with gliding but, if we broaden our fields of vision, it shows very promising possibilities for the future development of light aviation in general.

In fact, the light aeroplane designed as a motorglider offers the following advantages over the current light aeroplane:

1) smaller fuel consumption at comparable speeds;
2) increased range for the same quantity of fuel
3) possibility to operate on small airstrips;
4) lower risk in outlanding.

Whereas, points 3 and 4 need not be explained to glider pilots, some numerical examples better illustrate points 1 and 2.

Figures 14 and 15 show the calculated fuel consumption per hour and per 100 km, respectively, assuming each aircraft to be flying at $(L/D)_{max}=E_{max}$. The propeller efficiency has been assumed to be 0.7 for the light aeroplanes, 0.55 for the motorgliders, 1st type, 0.50 for the motorgliders, 2nd type, 0.60 for the S.10.

The benefit of attaining $\eta=0.7$ on the Taifun and DG-400 is also shown. The corresponding ranges can be easily evaluated from these data, assuming the fuel volume or weight appropriate to each case.

Figure 16 compares the same aircraft cruising at 75% engine power. A propeller efficiency $\eta=0.7$ was assumed in this case for all aircraft. A different value of η would simply shift the points vertically in proportion.

These figures need no comment, the advantage of motorgliders being very evident.

It should be noted that the calculations have been made under the assumption that engines can be operated in a wide range of power rating, keeping the specific fuel consumption constant. Now, this is approximately true for a 4-stroke piston engine, but not at all for the 2-stroke engine.

Therefore, for the motorglider of the 2nd type (the "sailplane with motor") the fuel consumption shown here is unrealistic. It could be interpretated as the fuel consumption achievable using a 4-stroke engine.

The propeller efficiency is something very difficult to assess. Values for isolated propellers are usually strongly reduced because of the aerodynamic interference with other parts of the aircraft. A reduction gear may be highly beneficial, for noise reduction purposes as well.

4. A NEW TYPE OF COMPETITION TO STIMULATE DEVELOPMENT

Often the sporting competition stimulates technical development. It is so in many sports, especially when a machine is involved (motor car racing; motorcycle, bicycle, motorboat racing; sailing, gliding, etc.).

The development of sailplanes has certainly been strongly oriented by the gliding championships, more and more based on speed tasks.

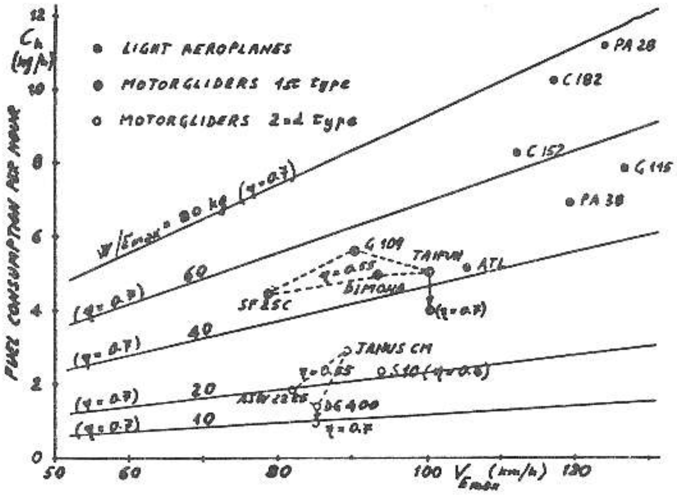

Figure 14. Fuel consumption per hour.

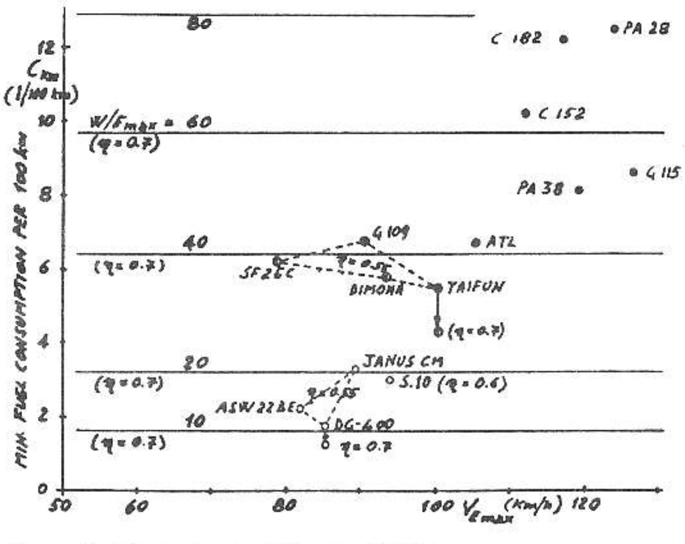

Figure 15. Min. fuel consumption per 100 km.

The actual Motorglider Championships are suitable to stimulate the "self-launching sailplane," but will never encourage the development of a light aeroplane with lower fuel consumption and, therefore, lower operating costs.

For this sake, in the author's opinion, a new type of competition is needed.

One may think of a few or several contest days. On each of them a speed task is given over a prefixed course (an "out and return," a triangle or else): much like a gliding championships.

Here, however, the competing pilot may use the engine, whenever he estimates that the pure soaring performance would produce too low an average speed.

Points P should be awarded, therefore, as a function of both speed and fuel consumption. For instance:

$$P = 1000\,V/V_{max}\,(1 - F/F_{max})$$

where:

V = average speed achieved,
V_{max} = best average speed achieved,
F = fuel comsumption,
F_{max} = max. fuel comsumption.

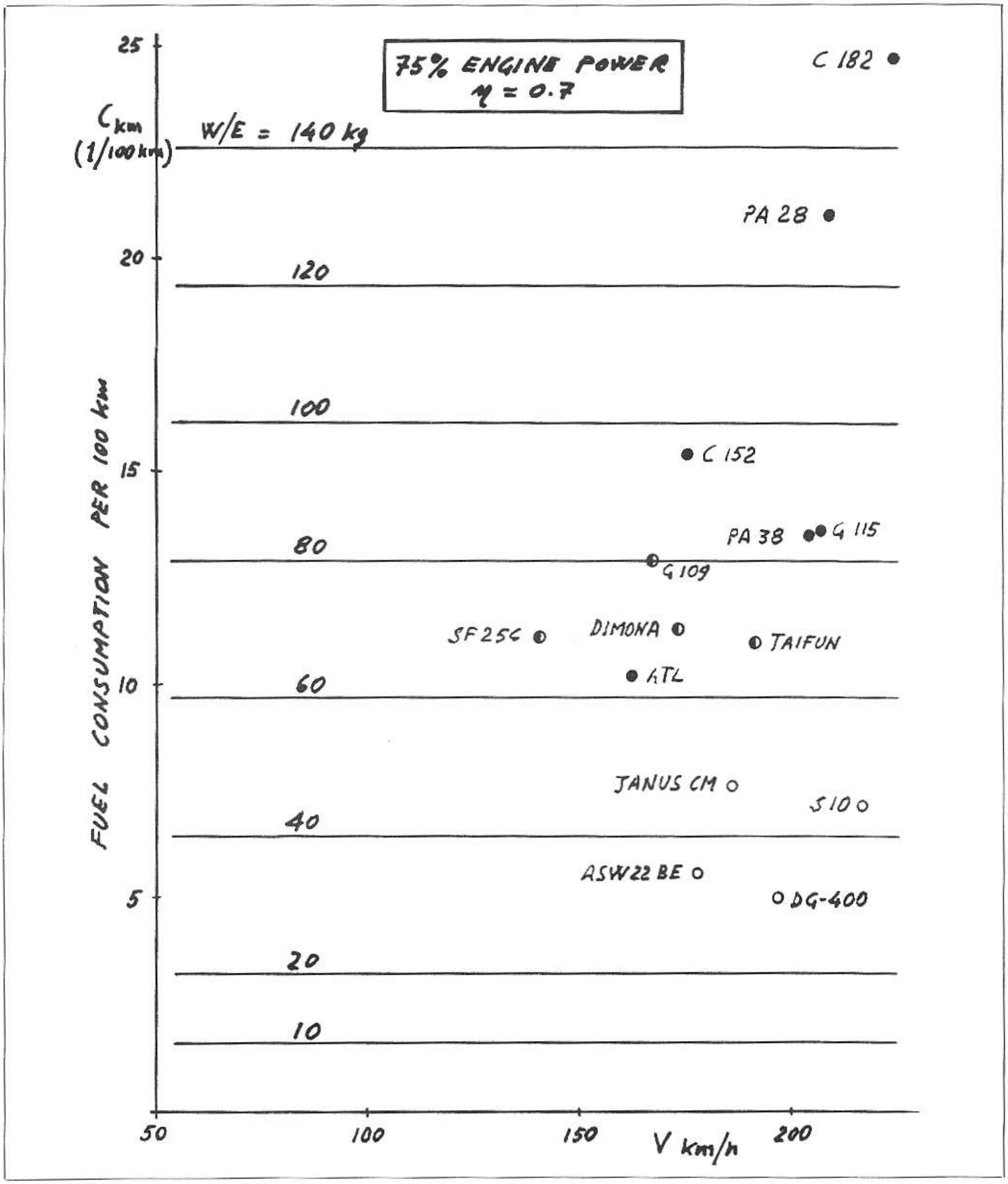

Figure 16. Fuel comsumption per 100 km.

In the author's opinion, this type of competition in a sufficiently long term of time would produce several positive effects. In particular:

(1) the development of light aeroplanes of better performance and lower operating costs would be stimulated.

(2) A better understanding of the air motions in the atmosphere would be acquired by the aeroplane pilot.

(3) Glider pilots and aeroplane pilots would come closer together.

(4) From the educational standpoint, the "energy saving" mentality would be promoted and enhanced.

If compared with gliding championships, this type of competition would be much easier to run as it would require a much simpler organization (no towplanes, no grid, no startline) and would be much less restrained by the weather.